ANGLED VIEW

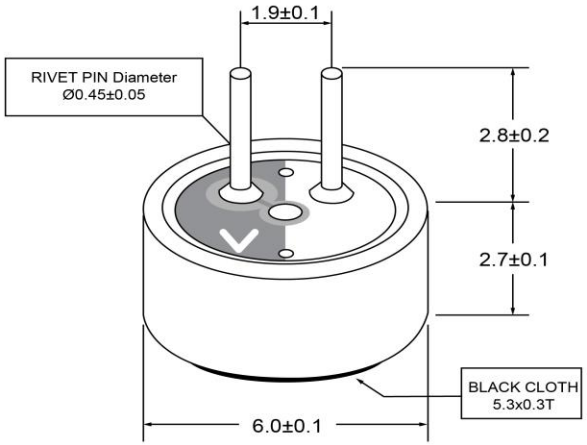

SIDE VIEW

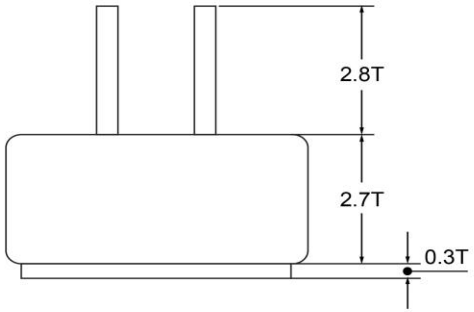

BOTTOM VIEW

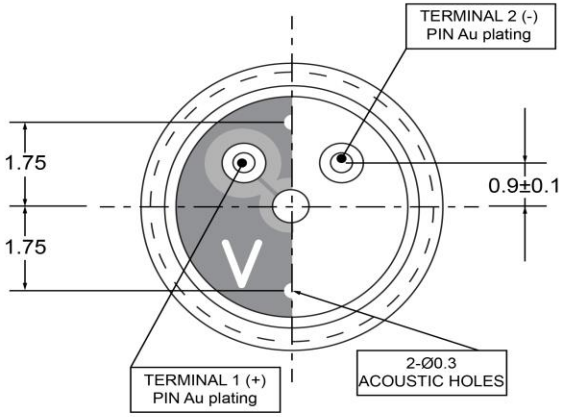

Specifications

Description	Value	Unit
Directivity	Unidirectional	
Technology	Electret Condenser	
Sensitivity	-44	(dB)
Frequency Range	40 ~ 20,000	(Hz)
Rated Voltage	2	(V)
Impedance	2,200	(Ohm)
Connection Method	PC Pins	
Voltage Range	1 ~ 10	(V)
Max Rated Current	0.45	(mA)
Minimum Signal to Noise Ratio	>55	(dB)
Operating Temperature	-40 ~ +85	°C
Storage Temperature	-40 ~ +85	°C

Notes

1) All dimensions are in mm unless otherwise noted
2) All parts meet RoHS

DB UNLIMITED

Revision History

Version	Description	Date	Approved
1	Released from Engineering	10/21/2013	J.S

Drawn by	Date	Checked by	Date	Approved by	Date
A.B.	10/21/2013	C.E.	10/21/2013	J.S	10/21/2013

Electret Condenser Microphone

MU064402-2

Additional considerations can be found at www.dbunlimitedco.com/technical-articles.

©2013, DB Unlimited